STATE OF CALIFORNIA—HEALTH AND WELFARE AGENCY

GEORGE DEUKMEJIAN, Governor

DEPARTMENT OF HEALTH SERVICES
714/744 P STREET
P.O. BOX 942732
SACRAMENTO, CA 94234-7320

January 29, 1991

Letter No.: 91-05

All County Welfare Directors
All County Administrative Officers
All Medi-Cal Program Liaisons

SUBJECT: NEW MEDI-CAL CARD IMPLEMENTATION

The Department of Health Services (DHS) is implementing the redesigned Medi-Cal card in March 1991 for the April 1991 Month of Eligibility (MOE). This letter provides counties with information and instructions necessary to proceed with implementation of the redesigned Medi-Cal card.

BACKGROUND

The current Medi-Cal card format has limited space to clearly define service limitations, restrictions and special service information. The card contains service restriction information provided by Audits and Investigations (A&I), capitated health care plan (HCP) enrollment provided by Capitated Health Systems Section, other health coverage (OHC) information provided by Recovery Branch and hospice information provided by Medi-Cal Benefits Branch. Medical providers use the information on the Medi-Cal card to determine what services may be given to a beneficiary. The fiscal intermediary (FI), Electronic Data Systems (EDS), uses the information to properly adjudicate (process) claims.

There are currently three (3) different Medi-Cal card formats in use. The MC 300 is the card produced by DHS for all eligible beneficiaries at renewal and for daily requests by counties. Depending on scope of coverage, the MC 300 is produced on red or green laminated card stock with pressure sensitive adhesive labels. The MC 301 is an immediate need card hand typed by counties when the Medi-Cal Eligibility Data System (MEDS) is unavailable or when there is conflicting information on MEDS which cannot be corrected, e.g., aliens over 65 but not yet eligible for Medicare or negative actions. The MC 301 comes in red or green paper stock with non-adhesive perforated labels. The MC 302 is an immediate need card produced by counties through MEDS on printers located at county welfare department offices, and is available only in green card stock, also with non-adhesive perforated labels. Each card has a different format with beneficiary information in different places on the card.

TASK FORCE RESULTS

In April, 1987, the Medi-Cal Eligibility Branch (MEB) established a task force which redesigned the Medi-Cal card to accommodate changing program requirements mandated by federal regulations, to more effectively meet the current needs of departmental programs, and to allow accommodation for future changes.

Task Force recommendations were accepted by DHS and put into effect with the new card as follows:

1. The Medi-Cal card was redesigned to add additional space for new and expanded data elements. Both the MC 300 (state issued) and MC 302 (county issued) cards will be enlarged to 3 1/2 X 6 1/2 inches, with two (2) MEDI and two (2) POE labels each.

2. There will be only one color and one type of Medi-Cal card stock. The card stock will be white with green background graphics and print. Both the MC 300 and MC 302 will have pressure sensitive adhesive labels. The MC 301 will be obsolete. Specific service restrictions and program information will be bordered with green lines on both the card body and the labels.

REDESIGN BENEFITS

Having only one type of card with the same color and same information format, regardless of the card's production source, will allow providers to more accurately determine program eligibility and benefits, resulting in fewer instances of inappropriate services being provided and claims being denied by the FI. Currently, when a beneficiary has one or more service restrictions, only one message can be placed on the Medi-Cal card. The printing of more than one message is needed to identify limited service as well as special service restrictions, aid code limitations and health care plan (HCP) information.

Other enhancements include:

- Improved restriction message area on both the card body and labels to reduce card altering.

- Expanded HCP messages to clearly identify participants and plan names, and to provide plan telephone numbers.

- Expanded Other Health Coverage (OHC) information, including insurance scope of coverage coding, to amplify and enhance cost avoidance efforts.

REDESIGNED MEDI-CAL CARD SCHEMATIC AND EXPLANATION OF CHANGES

A schematic diagram of the redesigned Medi-Cal card with detailed explanation of all information fields is attached. The following changes will be evident on the redesigned Medi-Cal card when it is implemented:

- SIGNATURE and DATE lines have been moved to the front of the card.

- Field #2: Birth year will be represented by cyy where cyy = 3 character numeric year. Ex: 1966 = 966.

- Field #7: Will display either Share of Cost (SOC) certification day or the SOC percent of obligation.

- Field #8: Will display the SOC amount at all times.

- Field 9e: Zip code has been moved to a separate line below the city, state line. Also, there is room for Zip + four for future postal savings.

- Field #12: Will display literal messages for service restrictions from A&I, Transfer of Assets, Minor Consent and Hospice care. NOTE: All of these messages are mutually exclusive.

- Fields #13-15: Will display up to three (3) out of five (5) potential floating messages re: aid code restrictions, Health Care Plans, Other Health Coverage, Dental Other Health Coverage and Additional Other Health Coverage. The HCP message area will provide plan names and phone numbers for PCCM's and HCP's when preauthorization is required for treatment. The OHC message area will provide plans names, ID numbers, and scope of coverage coding (inpatient, outpatient, pharmacy, vision, etc.) to assist providers in providing only covered services. This information is scheduled to be posted to the MEDS database by the DHS Recovery Branch Health Insurance System (HIS) for card production in May or June 1991. The Additional OHC message area will be the same as the OHC message area. This information will also be posted by HIS beginning in May or June 1991. The Dental OHC message area will be implemented at a future date. Note: Line 13 of the floating message area is a fixed line. An OHC code (O/C) will always be posted to the card body on this line, even if there is no other coverage (O/C N). Scope of coverage (COV) will be present whenever there are OHC messages, and will show combined coverages for all OHC plans owned by the beneficiary.

- Field #18: State coding for online produced cards will now include terminal ID as well as terminal operator, julian date and time. Hand typed cards will be designated by "HANDTYPE" in this field.

- Field # 25: Year of birth expanded from two (2) characters to three (3) characters so that "66" becomes "966".

- Field #26: More room allowed for beneficiary name on labels (15 characters for last name and 6 characters for first name).

- Field #27: Labels have entire beneficiary county ID (county code + aid code + case serial + fbu + person number) rather than just county code and aid code.

- Field 30: Service restrictions for A&I, Transfer of Assets, Minor Consent and Hospice will be displayed with literals in an outlined box on each label rather than with numeric codes.

- Field #32: A Dental OHC code will be present when this portion of the redesign is in place.

- Field #33: SOC certification day will now be on the labels.

IMPLEMENTATION DATE

The redesigned Medi-Cal card will be implemented statewide on March 18, 1991. Changes for the state issued, MC 300 cards will be installed on Friday, March 15, 1991. Any cards produced in the daily process from that night forward will be in the new format. Changes for the county issued, MC 302 cards will be installed on Sunday, March 17, 1991. ALL PRINTERS USED FOR ONLINE MEDI-CAL CARD PRODUCTION MUST BE LOADED WITH NEW CARD STOCK, MC 302(12/90), WHEN COUNTY WELFARE DEPARTMENTS OPEN FOR BUSINESS ON MONDAY, MARCH 18, 1991. (Do not change card stock before Sunday, March 17, 1991 as any cards produced online through Saturday, March 16, 1991 will still be in the old format.) On March 18, 1991, the MC 301, red and green, and all prior versions of the MC 302 will be obsolete, and must be destroyed using standard procedures for confidential shred. DO NOT DESTROY ANY CARD STOCK UNTIL INSTRUCTED BY DHS. Any Medi-Cal cards produced online, by hand or in daily batches from that date forward must be on new card stock and in the new format, regardless of the MOE.

MC 302 CARD STOCK: ORDERING

In response to EMC2 90-170, dated December 6, 1990, counties provided MEB with the information necessary to complete and forward MC 1's on their behalf to the DHS warehouse, requesting an initial three (3) months's supply of MC 302(12/90) card stock. Orders will be shipped to the counties beginning February 1, 1991. Orders for current stock and all subsequent MC 302(12/90) orders are to be made on the MC 1 and sent to the DHS Warehouse as instructed in All County Welfare Directors Letter (ACWDL) 89-77, dated September 14, 1989.

The redesigned MC 302(12/90) will be packed 3000 continuous feed cards per carton. Monthly usage estimates should include cards "wasted" for online production as well as hand typed cards. Do not include card stock currently used for screen prints in the monthly usage totals, as screen prints will no longer be made on card stock.

CARD STOCK STORAGE/PROCESSING ENVIRONMENTS

Because the redesigned MC 302(12/90) contains pressure sensitive adhesive labels, cards must be stored and processed in a controlled environment. Card stock is to be stored indoors, out of direct sunlight and in the unopened original containers, at a typical temperature range of 60°F to 80°F. Temperatures in card processing areas are to be maintained between 60°F and 80°F, and between 45% to 60% relative humidity. Cards should be allowed to acclimate to the environment in the opened box at least seven (7) calendar days before processing.

PRINTER CARE AND ADJUSTMENTS

Instructions for adjusting the MEDS IBM 4224 printers for the redesigned MC 302(12/90) are attached. Counties which produce online cards on county owned printers are responsible for adjusting those printers, either themselves or with help from their printer manufacturer representative.

The MC 302(12/90) has been designed with nonadhesive glue areas to avoid glue build up as much as possible. However, periodic cleaning may be required to ensure quality print over time. Clean anywhere the card makes contact with the printer, i.e., the tractor feed, print head, rollers, etc. If an unusual amount of glue build-up or other problem with the card stock itself occurs, please advise the MEB forms coordinator, Craig Yagi, at (916) 327-5320, so that changes can be made to future Medi-Cal card manufacturing specifications.

The print quality for claims processing by the FI can be enhanced by purchasing ribbons especially made for Optical Character Recognition (OCR) scanning and microfilming. Check with your county's ribbon purchasing agent for information about these ribbons.

COUNTY TESTING

All counties will be able to adjust their printers and test the new MC 302(12/90) card stock in February, 1991, once the initial shipment of cards is received. DHS is requesting that each county designate a person to be the "technical expert" for adjusting printers. That person would then be responsible for ensuring that all staff who work with the card stock and printers know how to adjust the printers in preparation for redesign implementation. Staff who experience difficulties on implementation morning would then call their county "technical expert" rather than DHS. If there are problems the county "technical expert" cannot resolve, he/she will then contact DHS for assistance. An EMC2 will be sent to counties in February with more testing details and requesting the name of each county's "technical expert".

CPU link counties that produce online cards on county printers defined to MEDS may wish to test cards while adjusting their printers. Test mode for the redesigned online card (SETN) will be available on the CICSE region around January 15, 1991. An EMC2 will be sent as soon as the definitive date is known. Counties may test the new card any time after that date. Those CPU counties who wish to begin testing before receipt of their initial shipment of card stock in February may contact Ginny Erickson at (916) 327-5317 or via EMC2 mail ID HDGERIC, as MEB has some test card stock available.

SCREEN PRINTS ON CARD STOCK

EMC2 #90-153, sent November 9, 1990, informed counties that when the redesigned Medi-Cal card is implemented, the option to screen print on Medi-Cal card stock will no longer be available. This is because the new MC 302(12/90) measures 65 characters wide whereas a screen print measures 80 characters. Also, the new card stock, with pressure sensitive adhesive labels, will be too costly to use as screen printing paper stock.

Based on responses to a survey from the same EMC2, it appears that a number of counties are still printing screen prints on Medi-Cal card stock and will need additional printers in order to accommodate both card production and screen print functions in the same location. However, as explained in EMC2 90-171, sent December 6, 1990, the Governor has imposed a freeze on General Fund expenditures, which includes all MEDS computer equipment. DHS will be requesting an exemption to the freeze for county MEDS computer equipment. All counties may request MEDS leased equipment on the MEDS 32 form per instructions in ACWDL 90-65, dated July 3, 1990; all additional equipment must be justified according to usual procedures. Approved requests will be held by DHS until such time as the freeze is lifted or an exemption is received.

CPU link counties may request additional equipment through their usual procedures for county owned equipment, as we understand that County Approvals Funds available through the Department of Social Services (DSS) are not subject to the freeze. Until such time as additional printers become available, both CPU link and non-CPU link counties may have to temporarily reorganize their internal operating procedures to avoid screen printing on the new MC 302(12/90) card stock.

FORTHCOMING INFORMATION

Beneficiary stuffers will be sent with all April 1991 MOE cards and with all cards produced in the daily batch process subsequent to implementation in March 1991. Stuffers will also be sent to all April 1991 uncertified SOC beneficiaries.

Provider Bulletins will be sent in February 1991 and April 1991. A copy of the Redesigned Card and Schematic Explanation will be included with the February 1991 bulletin.

A second ACWDL will be sent in February 1991 with additional information and instructions for hand typed cards. Copies of stuffers, provider bulletins and MC 300 and MC 302's will be attached. EMC2's and/or MEDS broadcasts reminding counties of the implementation date and the need to change to the new card stock will be sent in March 1991.

Questions relating to the adjustment of the IBM 4224 printers may be directed to Ginny Erickson of the MEB Systems Unit at (916)327-5317 or to Louie Baron of the Data Systems Branch Technical Support Unit at (916) 324-3877. Questions regarding all other aspects of the redesigned Medi-Cal card and its implementation should be directed to Ginny Erickson.

Sincerely,

ORIGINAL SIGNED BY

Frank S. Martucci, Chief
Medi-Cal Eligibility Branch

Enclosures

ENCLOSURE A

REDESIGNED MEDI-CAL CARD (EFFECTIVE 4/91)

A task force composed of Department of Health Services staff redesigned the Medi-Cal card to better serve providers, beneficiaries and program administration. Implementation date of the new card will be April 1991 month of eligibility (MOE). The new cards are larger than the current card (3 1/2 x 6 1/2). Both the MC300 and the MC302 will be green, have pressure sensitive labels and contain 2 POEs and 2 MEDI labels (or 4 POEs). There will no longer be red cards. The area for service restrictions will be bordered by green lines to make it stand out and will be larger than the current area on the cards. With expanded Other Health Coverage (OHC) information, including scope of coverage, and the restriction area more prominent, there will be fewer non-covered services provided as well as fewer claims rejected. Other enhancements: signature block will be moved to the front of the card, Zip Code + 4 capabilities, SSN on the card as well as the labels.

The MC301 will be obsolete as hand typed cards can be done on the MC302. All cards will now have the same format. Two provider bulletins will be issued during the next six months to provide more information and a final schematic of the card. A beneficiary stuffer will be sent the first month new cards are issued.
Below is an illustration of the proposed new card. There may be slight modification to the layout prior to implementation of the card.

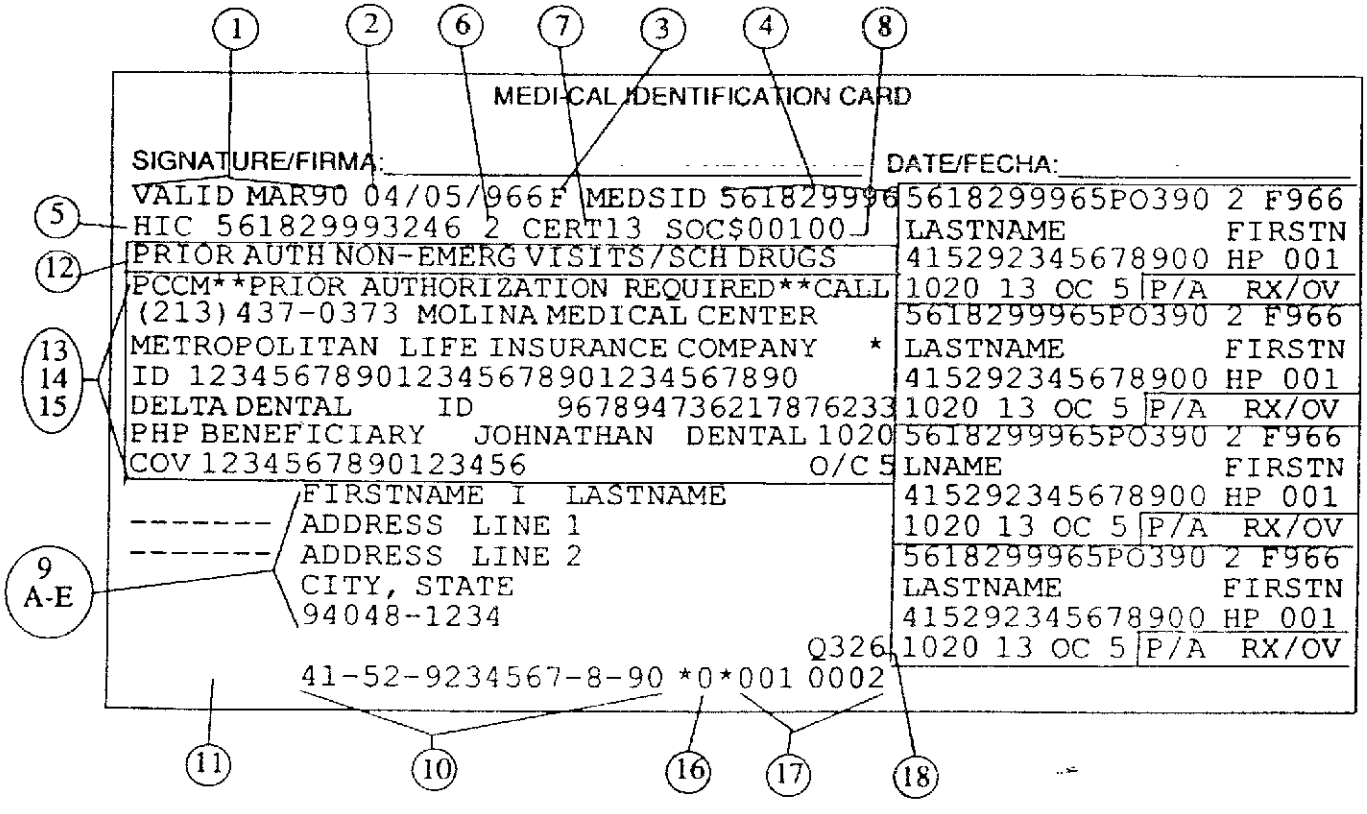

REV 01/15/91

REDESIGNED MEDI-CAL CARD SCHEMATIC EXPLANATION

SCHEMA	LINE	COLS.	DESCRIPTION
1	04	02-12	Valid month and year of card. Format: VALID mmmyy, where mmm = 3 character alphabetic month abbreviation and yy = 2 character numeric year (e.g., JUN87). Three-month retroactive period cards and cards issued for records established on MEDS subsequent to month of eligibility will have RETRO instead of VALID.
2	04	14-22	Date of birth. Format: mm/dd/cyy where mm = 2 character numeric month, dd = 2 character numeric day and cyy = 3 character numeric year (c = century).
3	04	24-24	Sex code. Format: s where s = 1 character alphabetic field. Valid values: M = male, F = female.
4	04	26-41	MEDS ID. Format: MEDSID xxxxxxxxx where xxxxxxxxx = 9 digit social security number or pseudo MEDS ID.
5	05	02-17	Medicare billing number Format: 1 line @ 16 alphanumeric characters. Valid values: HIC (or RRB) xxxxxxxxxxxx where xxxxxxxxxxxx = a 9 to 12 digit Health Insurance Claim (HIC) number or Railroad Retirement Board (RRB) number, if beneficiary is over 65 or Medicare eligible per MEDS and the HIC/RRB is on MEDS; or SSA# xxxxxxxxx where xxxxxxxxx = a 9 digit Social Security Account (SSA) number, if beneficiary is over 65 or Medicare eligible per MEDS and the HIC/RRB number is not on MEDS; or Blank (16 character spaces unused).
6	05	19-19	Medicare status indicator. Format: m where m = 1 character numeric field. Valid values: Blank, 1, 2, and 3.
7	05	21-26	Share of cost certification day or share of cost percent of obligation. Format: CERTdd or %OBLnn where dd = 2 digit numeric field representing the day of the month the share of cost was met or nn = 2 digit numeric field representing the percent of the beneficiary's obligation.

REDESIGNED MEDI-CAL CARD SCHEMATIC EXPLANATION

SCHEMA	LINE	COLS.	DESCRIPTION
8	05	28-36	Share of cost amount. Format: SOC$nnnnn where nnnnn = 5 digit numeric field.
9			Address area, five parts, a,b,c,d and e.
9a	14	11-41	Beneficiary name. Format: 28 character alphanumeric field.
9b	15	11-41	In care of address line. Format: 26 character alphanumeric field.
9c	16	11-41	Street address line. Format: 26 character alphanumeric field.
9d	17	11-41	City/State line. Format: 20 character alphanumeric field.
9e	18	11-41	Zipcode line Format: 10 character alphanumeric field.
10	20	11-28	Beneficiary county ID. Format: cc-aa-sssssss-f-pp where cc = 2 digit numeric county code, aa = 2 digit alphanumeric aid code, sssssss = 7 digit numeric serial number, f = 1 digit alphanumeric family budget unit code and pp = 2 digit alphanumeric person number
11	15-21	01-10	Trigger mark area. Used by CID Mail Room equipment for sorting cards by household and zip code.
12	06	02-41	Service restriction message area. This field will be outlined in green and will contain X's when no messages are present. Format: 1 line @ 40 alphanumeric characters. Valid messages include: Audits & Investigations: PRIOR AUTH ALL DRUGS PRIOR AUTH SCHEDULED DRUGS PRIOR AUTH NON-EMERG OFFICE VISITS PRIOR AUTH NON-EMERG VISITS/SCH DRUGS PRIMARY CARE PROVIDER PROGRAM

REDESIGNED MEDI-CAL CARD SCHEMATIC EXPLANATION

Transfer of Assets:

LONG TERM CARE SERVICES ARE NOT COVERED

Minor Consent:

FOR LIMITED SERVICES ONLY - MINOR L4
FOR LIMITED SERVICES ONLY - MINOR L5
FOR LIMITED SERVICES ONLY - MINOR L6
FOR LIMITED SERVICES ONLY - MINOR L7
FOR LIMITED SERVICES ONLY - MINOR L8
FOR LIMITED SERVICES ONLY - MINOR L9

Hospice Care:

PRIMARY DIAGNOSIS/LIMITED TO HOSPICE

13-15 07-13 02-41

Floating restriction/coverage area

Area 13-15 will be a "floating" message area used to identify restricted aid code messages, health care plans, other health coverage and dental coverage. This area will be outlined in green and will contain asterisks where no messages are present. Because this floating area, lines 07-12, contains room for a maximum of three restriction messages, these five message types will be prioritized as follows:

1) Restricted Aid Code Message
2) Health Care Plan (HCP) Message
3) Other Health Coverage (OHC) Message
4) FIMD Dental Message
5) Additional Other Health Coverage (OHC) Message

13 02-41

Fixed line of 40 alphanumeric characters:
20 characters for "COV" and 16 character scope of coverage code; 15 blank spaces; 5 characters for "O/C", 1 blank space and 1 character other health coverage code.

O/C code will always be present. Scope of coverage will be present when there are OHC messages.

PRIORITY 1

Restricted Aid Code Message Area
Format: 2 lines @ 40 alphanumeric characters
Valid messages include:
VALID FOR PREGNANCY AND POSTPARTUM SVS ONLY

REDESIGNED MEDI-CAL CARD SCHEMATIC EXPLANATION

SCHEMA	LINE	COLS.	DESCRIPTION
			VALID FOR EMERGENCY OR PREGNANCY RELATED SVCS ONLY SERVICES TO ACUTE HOSPITAL INPATIENTS ARE NOT COVERED VALID FOR EMERGENCY SVCS ONLY VALID FOR DIALYSIS SERVICES ONLY VALID FOR TPN SERVICES ONLY VALID ONLY FOR MEDICARE DEDUCTIBLES AND COINSURANCE
PRIORITY 2			Health Care Plan (HCP) message area. Format: 2 lines @ 40 alphanumeric characters For PCCM: First line: PCCM**PRIOR AUTHORIZATION REQUIRED**CALL Second line: 13 characters for phone number, 1 blank space and 26 characters for plan name. For County Health Initiatives: First line: CO HLTH INT - TREATMENT AUTHORIZATION CALL Second line: 14 characters for phone number, 1 blank space and 25 characters for plan name. For Kaiser: First line: PHP-FOR TREATMENT AUTHORIZATION CALL Second line: PHONE NUMBER ON KAISER HEALTH PLAN CARD For other HCP types: First line: PHP - FOR TREATMENT AUTHORIZATION CALL Second line: 14 characters for phone number, 1 blank space and 25 characters for plan name.
PRIORITY 3			Other Health Coverage message area. Format: 3 lines @ 40 alphanumeric characters First Line: 40 characters for the insurance company name. Second Line: 33 characters for "ID", 1 blank space and 30 character policy number.

REDESIGNED MEDI-CAL CARD SCHEMATIC EXPLANATION

SCHEMA	LINE	COLS.	DESCRIPTION
PRIORITY 4			Dental Other Health Coverage Message area. Format: 2 lines @ 40 alphanumeric characters First Line: 16 characters for the plan name and 1 blank space; 23 characters for "ID", 1 blank space and 20 character ID number Second Line: 29 characters for "PH", 1 blank space and 26 character beneficiary name; 11 characters for "DENTAL", 1 blank space and 4 character other coverage code.
PRIORITY 5			Additional Other Health Coverage Message area. Format: 3 lines @ 40 alphanumeric characters First Line: 40 characters for the insurance company name. Second Line: 33 characters for "ID", 1 blank space and 30 character policy number.

Note: We anticipate few beneficiaries will have more than three Medi-Cal card restrictions/coverage for this area.

16	20	30-32	Beneficiary ID check digit area
		30	Constant value '*'
		31	One numeric character
		32	Constant value '*'
17	20	34-41	County use area.
		34-36	County district
		37-37	Constant value space
		38-41	Eligibility Worker
18	19	38-41	State coding. Batch control number used in card production. (4 character alphanumeric field.)

See label for positioning

19	Social Security Number. Format: xxxxxxxxx where xxxxxxxxx = 9 alphanumeric characters which represent the social security number or pseudo MEDS ID.
20	Social Security Number check digit. Format: 1 digit numeric field, with values 0-9.

REDESIGNED MEDI-CAL CARD SCHEMATIC EXPLANATION

SCHEMA	LINE	COLS.	DESCRIPTION
21			Label type indicator. Format: x where x = 1 character alpha field. Valid values: P = POE label, M = MEDI label
22			Valid month and year of card. Format: mmyy where mm = 2 character numeric field from 01-12 and yy = 2 character numeric field from 00-99.
23			Medicare status indicator. Format: m where m = 1 character numeric field. Valid values: Blank, 1, 2 and 3.
24			Sex code. Format: s where s = 1 character alphanumeric field. Valid values: M = male, F = female
25			Year of birth. Format: cyy where cyy = 3 character numeric year (c = century).
26			Beneficiary name. Format: 22 character alphanumeric field with 15 characters for last name, 1 blank space and first 6 characters of first name.
27			Beneficiary county ID. Format: ccaassssssfpp where cc = 2 digit numeric county code, aa = 2 digit alphanumeric aid code, sssssss = 7 digit numeric serial number, f = 1 digit family budget unit code and pp = 2 digit person number.
28			Beneficiary county ID check digit. Format: 1 digit numeric field, with values 0-9.
29			Health Care Plan (HCP, PCCM or PHP code). Format: HP nnn, where nnn = 3 digit numeric Health Care Plan number. (Extra space in front of nnn is for a 4th digit when needed.)
30			Service restriction message area. Format: 9 alphanumeric characters. This field will be outlined in green and will contain X's when no messages are present.

REDESIGNED MEDI-CAL CARD SCHEMATIC EXPLANATION

SCHEMA	LINE	COLS.	DESCRIPTION
			Valid messages include:
			Audits and Investigations:
			P/A ALLRX P/A SCHRX P/A OV P/A RX/OV PCPP
			Transfer of Assets:
			RES LTC
			Minor Consent:
			MINOR L4 MINOR L5 MINOR L6 MINOR L7 MINOR L8 MINOR L9
			Hospice Care:
			HOSPICE
31			Other Health Coverage code. Format: OC x where x = 1 character alphanumeric field.
32			Dental other coverage code. Format: xxxx where xxxx = 4 character alphanumeric field.
33			Share of cost certification day. Format: dd where dd = 2 digit numeric field, values 01-31.

***NOTE: The State Seal will be printed on the Right Hand side of the card and will overlap the labels.

The online county produced card will be the same as above with the following exceptions:

REDESIGNED MEDI-CAL CARD SCHEMATIC EXPLANATION

SCHEMA	LINE	COLS.	DESCRIPTION
			Address area (9a-9e) will only include the beneficiary name.
			Trigger mark area (11) is blank.
			State coding (18) will be a 19 character alphanumeric field indicating terminal operator, terminal ID, julian date and time for each card produced.
			Hand typed cards will have the word, "HANDTYPE" in field (18).

ENCLOSURE B

IBM 4224 PRINTER ALIGNMENT
FOR REDESIGNED MC 302(12/90)

1. Place printer in stop mode by pressing STOP key (#2).

2. Open printer COVER.

3. Pull blue FORMS THICKNESS LEVER* forward towards front of printer past setting #6 to avoid inadvertent print head damage. (You may also refer to pages 3-9 through 3-14 of the IBM 4224 Printer Guide to Operations.)

4. Place card stock under end of FORMS SENSOR* and onto opened FORMS TRACTOR PINS*. Right TRACTOR PIN is movable and may have to be moved approximately two inches (2") to the left in order to fit right pin feed margin of the card stock. Close FORM TRACTOR PINS door.

5. Move PRINT HEAD* all the way to the right.

6. Using LINE SPACE key (#6), move card stock up until under ROLLERS. Watch for card stock binding or jamming when entering ROLLER area.

7. Press FORM FEED key (#4).

8. Press LINE SPACE key (#6) until TRIGGER MARK (solid green line) in right pin feed margin of card stock is even with top of flat section of metal PLATEN ROD*. (The bottom perforation of card stock will be in the middle of blue TOP OF FORMS GUIDE on right side of ROLLERS.)

9. Check CHARACTERS-PER-INCH (CPI) offline. (See page 2-21 of IBM 4224 Printer Operating Instructions.) CPI value must be 010 (10 characters per inch). (See page 2-21 to change the CPI offline.)

10. Check LINES-PER-INCH (LPI) offline. (See Operating Instructions page 2-26.) LPI value must be 006 (6 lines per inch). (See page 2-26 to change the LPI offline.)

11. Check MAXIMUM PAGE LENGTH (MPL) offline. (See Operating Instructions page 2-31.) MPL must be 021 (21 lines per page). (See page 2-32 to change the MPL offline.)

12. Press TOP OF FORM key (#3). If there is an audible beep, printer is now set to correct top of form. IF YOU DO NOT HEAR A BEEP, GO BACK TO STEP 7.

13. Return blue FORMS THICKNESS LEVER to original position.* (See STEP 3.)

14. Close printer COVER.

* See diagrams on page 2.

15. Press START key (#1). Printer is ready when green light glows.

16. Send test card to printer using the SETN option. Format is as follows:
SETN XXXX where XXXX = 4 character printer ID.
Example: SETN LI8A
NOTE: TEST CARD CAPABILITIES WILL NOT BE AVAILABLE TO COUNTIES UNTIL MID JANUARY 1991. An EMC2 will be sent informing counties when this option is ready.

17. Press LOAD EJECT key (#5) to inspect card. NOTE: "03" status indicator will appear.

18. Press LOAD EJECT key (#5) a second time to retract card stock and turn off "03" status indicator.
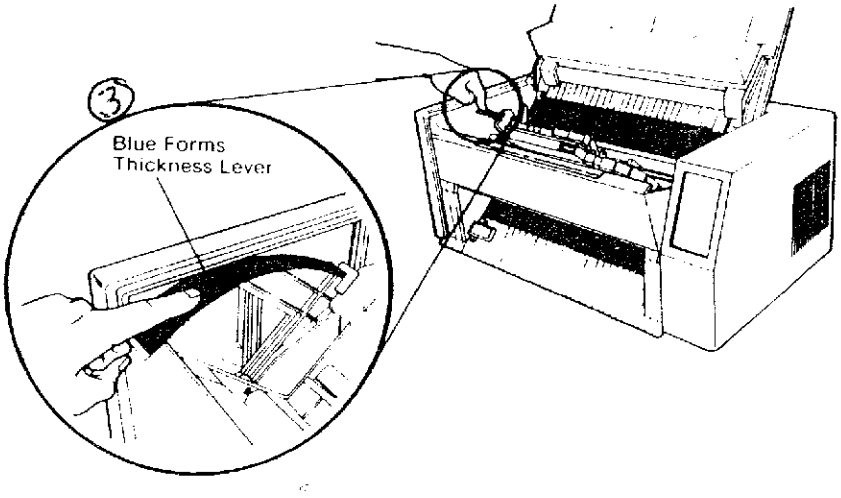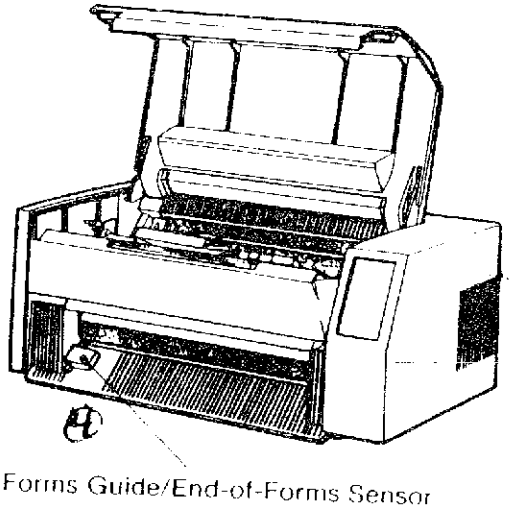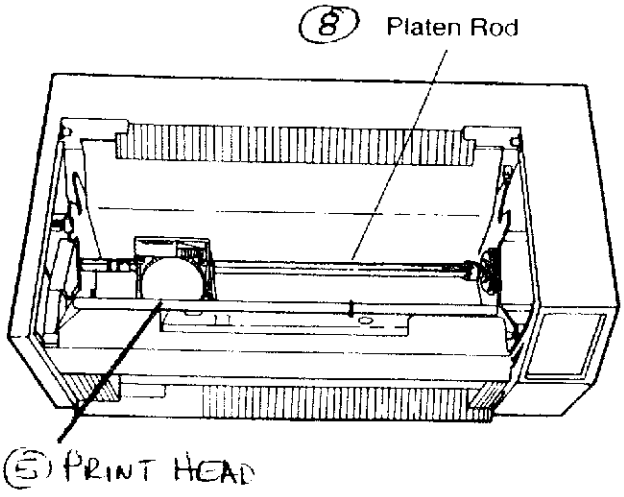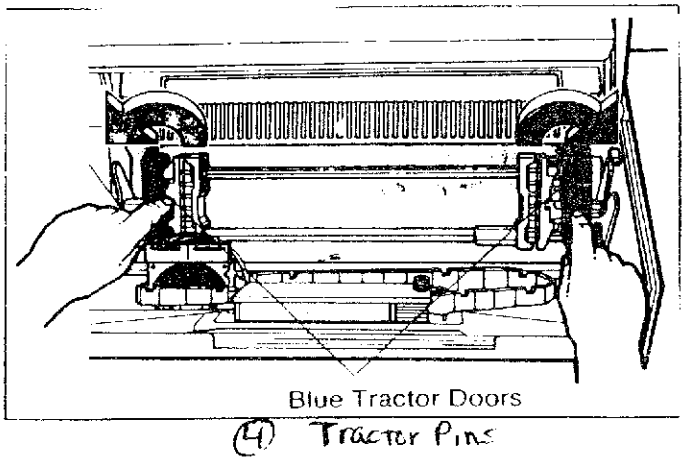
19. Printer should now be set to print Immediate Need Medi-Cal cards on the MC 302(12/90) and in the new format.